IF IN DOUBT ASK

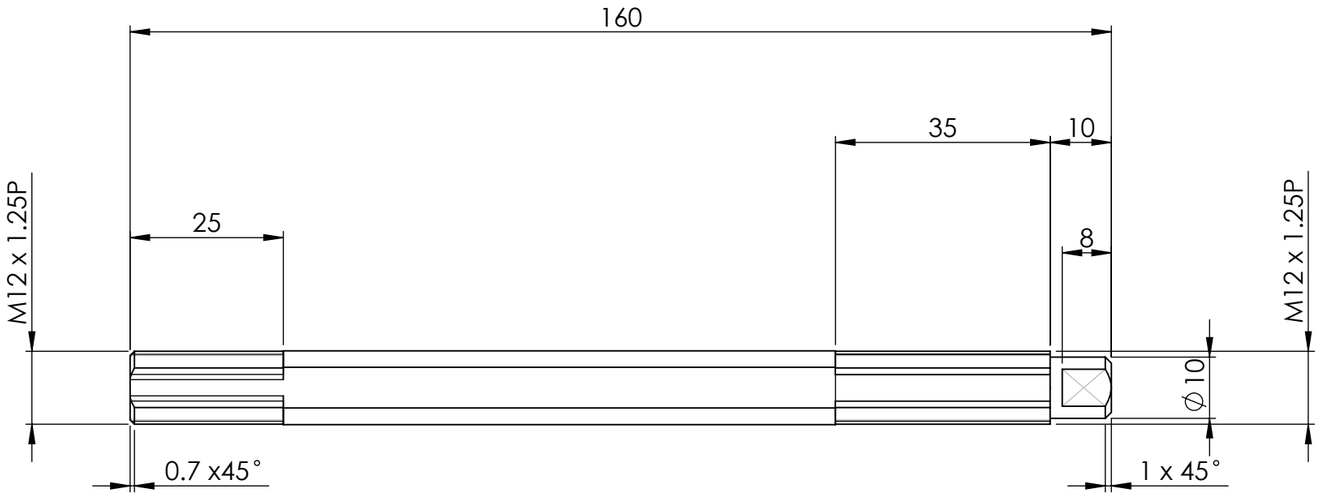

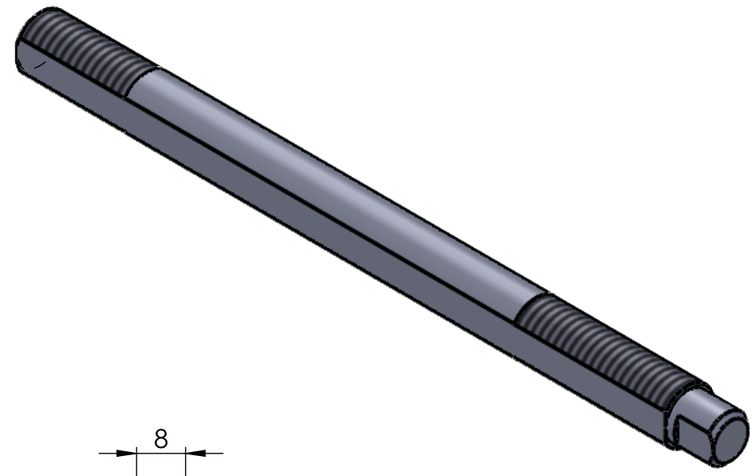

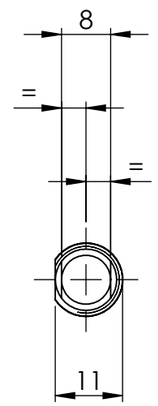

WAS TR20/0110

BREAK SHARP EDGES

DENFORD

COMPUTERISED MACHINES AND SYSTEMS

UNLESS STATED OTHERWISE

ALL DIMENSIONS ARE IN mm

LIMITS ON DIMENSIONS ANGULAR ±0.25 DEGREES
LINEAR / DIAMETRAL ± 0.5MM

MACHINE SURFACES Ra 1.6

ALL THREADS TO BE CLASS 6H / 6g

UNSPECIFIED GEOMETRIC TOLERANCES
TO LIE WITHIN THE TOLERANCE ZONE.

N°.	ALTERATION	ISSUE
	ORIGINAL ISSUE	1

DRAWN	IV	CHECKED	
DATE	11.10.99	3RD	
SCALE	1:1		
MATERIAL	EN8		
TITLE	DRAWBAR		
PART N°.	VMC/0107		