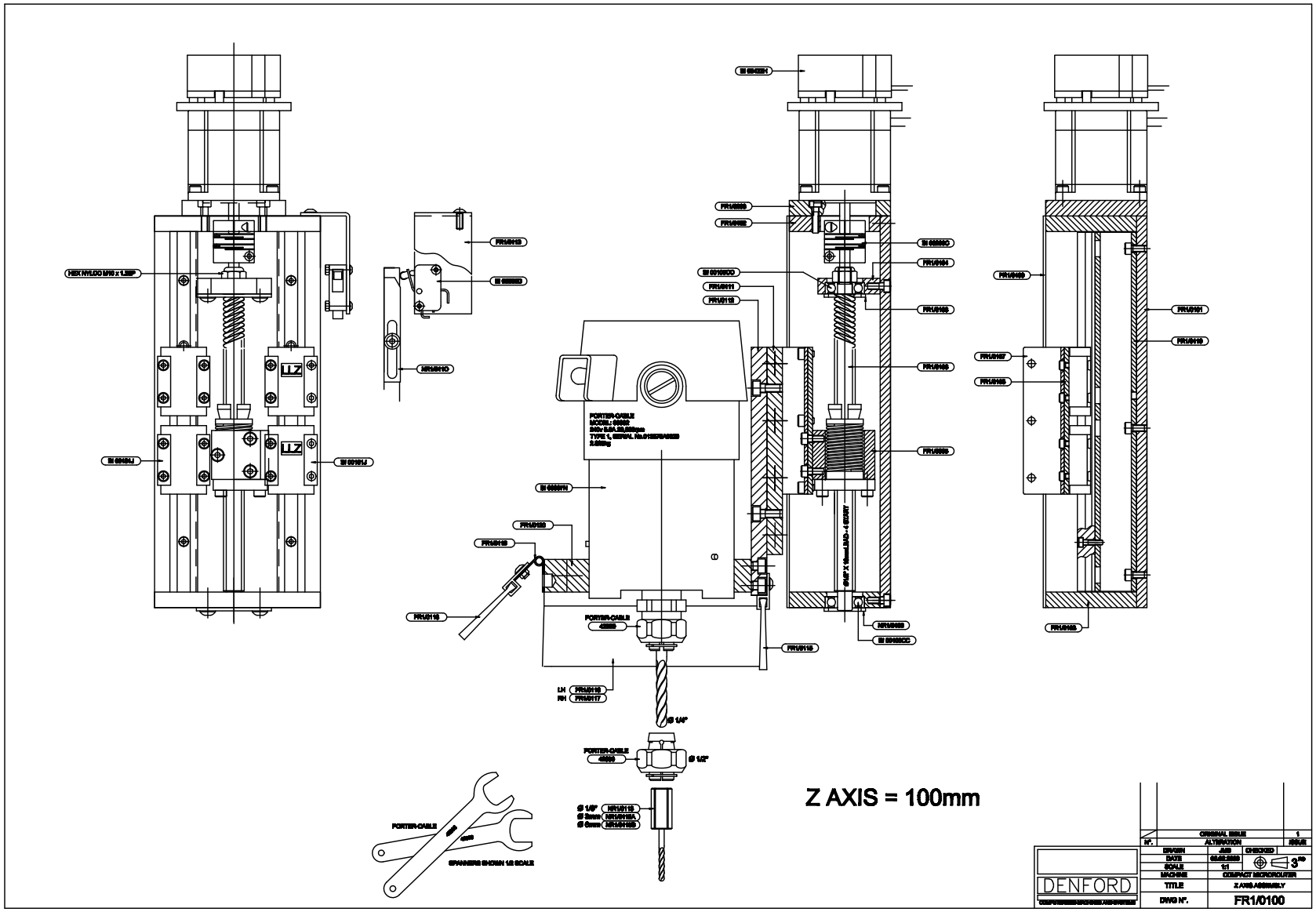
HEX NYLOC M6 x 1.25P
FR1/0110
FR1/0111
FR1/0112
FR1/0113
FR1/0114
FR1/0115
FR1/0116
FR1/0117
FR1/0118
FR1/0119
FR1/0120
FR1/0121
FR1/0122
FR1/0123
FR1/0124
FR1/0125
FR1/0126
FR1/0127
FR1/0128
FR1/0129
FR1/0130
FR1/0131
FR1/0132
FR1/0133
FR1/0134
FR1/0135
FR1/0136
FR1/0137
FR1/0138
FR1/0139
FR1/0140
FR1/0141
FR1/0142
FR1/0143
FR1/0144
FR1/0145
FR1/0146
FR1/0147
FR1/0148
FR1/0149