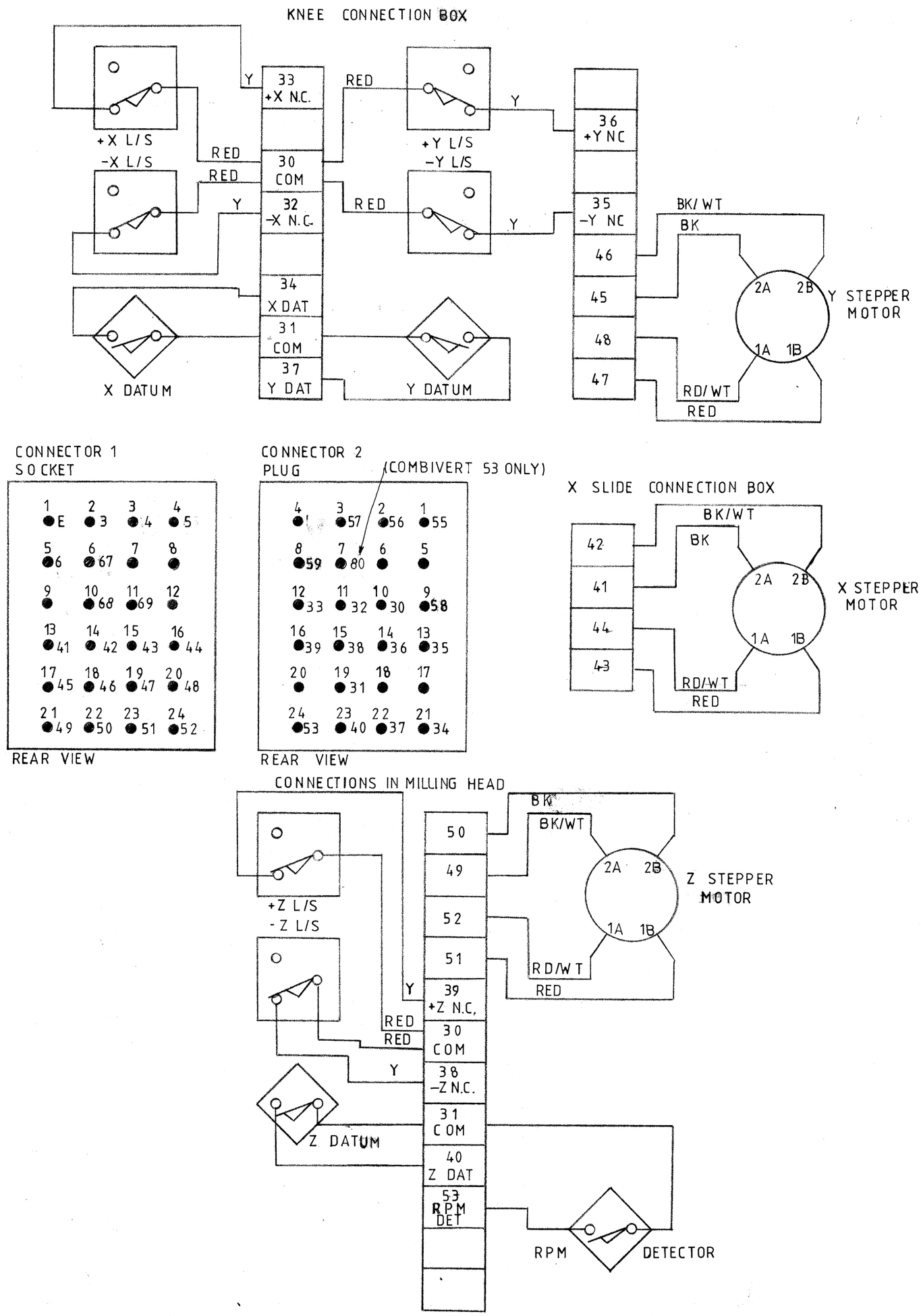

DENFORD MACHINE TOOLS LTD BRIGHOUSE WEST YORKS

DRAWN BY KEITH STANTON

DATE 14-12-83

DRAWING Nº A3-200026

EASIMILL VS WIRING DIAGRAM