EASIMILL 3

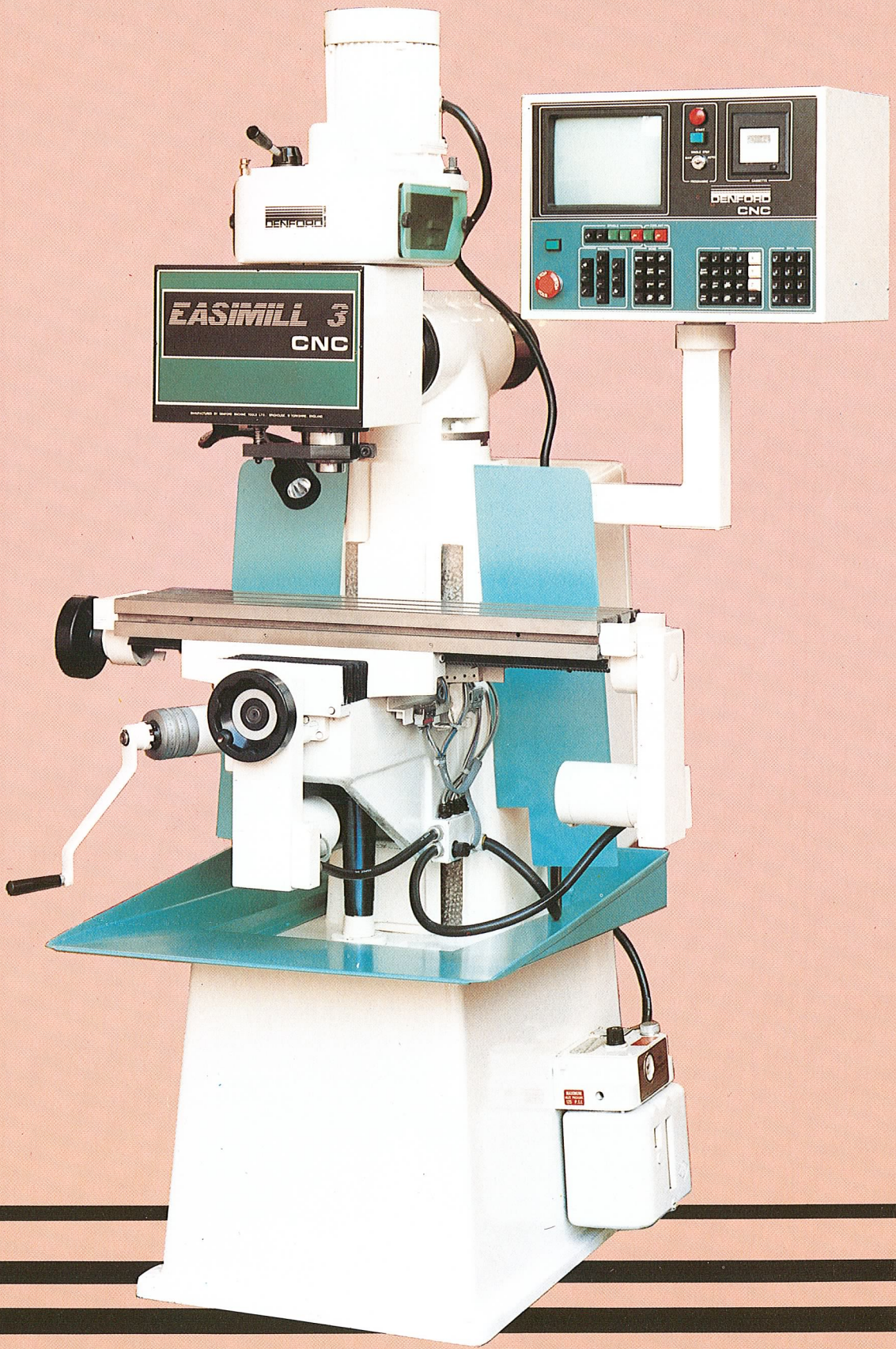

DENFORD

MACHINE TOOLS

EASIMILL 3

INSTALLATION, PROGRAMING AND MAINTENACE MANUAL.

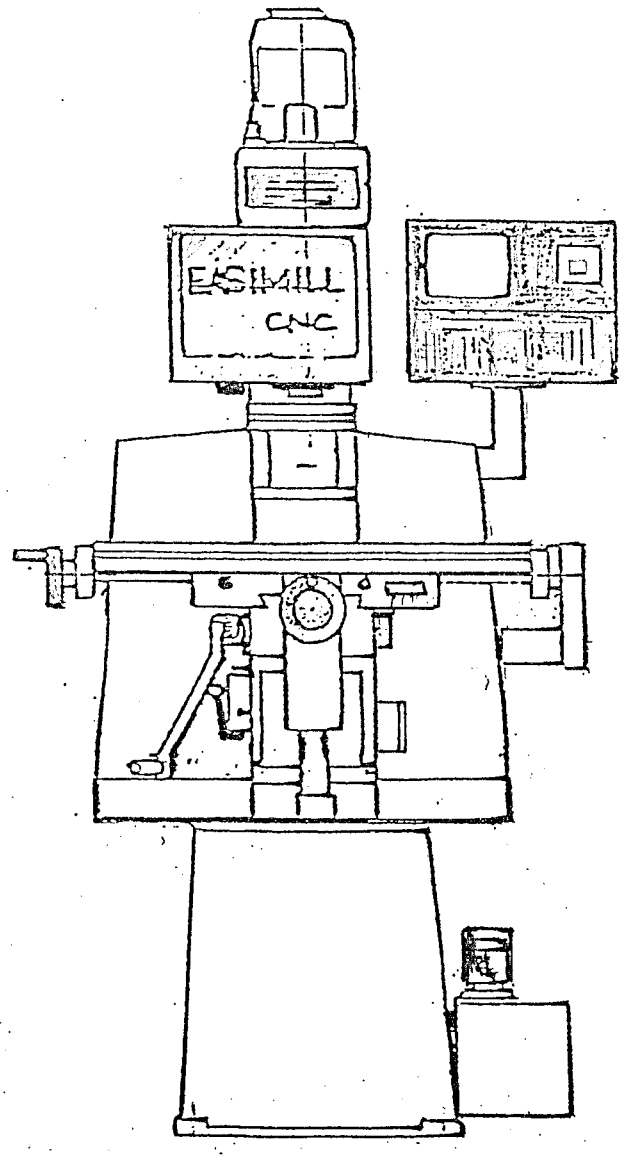

BENFORD

PNC 3

IMPORTANT

The PNC 3 should be electrically isolated from the supply if its cover is removed.

Before applying power to the system ensure that a) the input power is at the correct voltage and b) the drives/machine switches and auxiliary connectors are correctly connected.

The PNC 3 should be properly earthed (grounded) at all times.

The stepper motor drive boards in the drive unit may sustain severe damage if the motor connections are made or broken with the power still on.

PNC 3's with integral stepping motor drives are equipped with a fan which keeps the drives cool ensuring high reliability. The fan filter must be kept clear, this may be done by using a vacuum cleaner (do not use an air line) to remove the dust etc. The fan filter outer cover may be removed, and the filter changed if necessary.

The digital cassette unit and cassettes may be adversely affected by dust/swarf etc. in consequence care should be taken to keep the cassettes and cassette unit as free from dust as possible. The cassettes should be stored in their cases after first being rewound to the clear leaders.

Index.

Introduction

PNC3 Description

General information.

MACHINE codes (M function and G codes)

MOVEMENTS and associated FEED data input

CIRCULAR movements

AUXILIARY functions (Use of the 16 programmable auxiliary functions)

INPUT facilities (Use of the 8 programmable inputs)

BLOCK SEARCH (to run to any point of program that is in PNC 3 memory)

DATA LINK (to use the interface to a computer or printer)

STANDARD RS232C INTERFACE Specification

ENHANCED RS232 INTERFACE Specification

LOAD facility (to load PNC 3 memory from the PNC 3 Keyboard)

CASSETTE operations (use of the integral cassette program storage system)

EDIT facility (to edit a program that is in PNC 3 memory)

JOG facility (single step movement or feed override of each axes)

SCALE facility (overall and program scaling)

MIRROR facility (Mirroring of axes)

OFFSET facility (Use of the PNC 3 offset facility to 'offset' programmed dimensions)

REPEAT facility (Use of the repeat facility to repeat sections of a program a number of times)

DWELL facility (Use of the dwell facility to introduce variable time delays)

TOOL selection, CUTTER DIAMETER and LENGTH COMPENSATION

SPINDLE SPEED control, COOLANT control

ERROR MESSAGES

Introduction.

We are pleased to introduce you to this programmable numerical control, which has been designed, developed and manufactured by North East Electronics Ltd.

This low cost, reliable, accurate system is ideal for a wide range of applications which require precise positioning, for example on a variety of machine tools, for drilling, milling, engraving, welding and profile burning by laser or conventional methods using rotary and/or x-y tables.

At the heart of this system is a powerful NEE designed computer which gives the PNC 3 the ability to precisely control up to 4 axes of movement with linear and circular interpolation at programmable feedrates. The PNC 3 can also act as a process controller by giving up to 4 programmable auxiliary outputs and monitoring 8 programmable user assigned input signals.

It is North East Electronics policy to continually review and upgrade its products. This PNC 3 is the latest in a line of controllers whose forerunners are working in diverse applications with no small measure of success.

NEE will be pleased to discuss any application or upgrades to existing machines or applications/modifications of the PNC 3 control unit to suit new equipment.

PNC 3 Description.

The PNC 3 is an extremely versatile continuous path, computer based programmable numerical control unit designed to control via stepper motors a wide variety of machinery where precise control and positioning is required. Related processes and functions can also be controlled by the PNC 3. The programming of stepper motor movements and the process control element is explained fully in this manual. The PNC 3 we are confident will be found to be very easy to operate.

From the front panel total control is obtained by the following features:

An easy to use keyboard for the input of data and commands by the a) keyword system b) standard G and M code programming.

The 9" Display provides the user with :-
i)A display of the complete machine status
ii)Prompts to assist the user in using the control system
iii)Sections of the program during program loading, editing and execution
iv)Machine, Control Unit and Program error information.

Integral control unit memory stores typically 500 blocks.

Programming facilities include, repeat loops, fixed/floating datums, dwells, programable offsets, inch/metric and absolute/incremental programming with any mix, screwcutting (for lathes), program scaling, mirror imaging and cutter diameter and length compensation (for Mills).

Integral spindle and coolant control.

The integral fast magnetic tape system provides unlimited program storage space, with each cassette side storing up to 3000 program blocks.

Keyswitch to give manual programming/control, or single step program execution or automatic program operation. Program START and STOP switches.

Jog system giving manual control in all axes with plus and minus keys for feedrate override control.

Integral high power stepper motor drives.

General Information.

The PNC 3 has been designed with the user in mind. It is a versatile control system which is very easy to use.

The PNC 3 has numerous facilities all accessed by the keyboard in M.D.I. (Manual Data Input) mode. The majority of keys are self explanatory, being dedicated keys their functions are engraved on the key.

A list of keys and their functions follows:-

Reset - to reset from or end the current mode, or cancels the last recent entry.

T 1) Upon switching the PNC 3 ON pressing the T key gives a system test display enabling the PNC 3 input signals and machine mounted switches/wiring to be checked. (See the PNC3 Maintenance Manual for details)

2) After the machine has been datumed the T key is used for tool selection, tool setting and tool offset editing.

M For machine code M function selection (By pressing M then the Enter key a list of the M functions will be displayed).

G For machine code G function selection (By pressing G then the Enter key a list of G codes will be displayed).

-AXES KEYS, Fitted to suit application

X for X axis moves
Y for Y axis moves
Z for Z axis moves
U for U axis moves

BLOCK SEARCH — to enable program execution to commence from a specific point in the program.

EDIT — permits full editing facilities of the programmed sequence of instructions in MEMORY

S. — Subroutines (OPTION)

ZERO — To move machine to zero i.e. machine datum position.

DATA LINK — Selects a data link to external equipment e.g. an external computer or printer.

AUX INPUT — The PNC 3 control can act as a process control having 4 relay closure outputs (Auxilliary functions) and can monitor 8 external switches (Input function).

FEED — Input key for axes feeds.

PROG STOP — Operation of 'Program Stop' will stop execution of the current block. Additionally this key is used to program a STOP.

CASS — Permits use of the cassette system.

LOAD END — To start loading or complete loading a program.

EOB — End of Block or end of line of instructions..

ENTER — When keying in information it is echoed first on the display, after verification the data is then accepted by pressing "Enter".

The group of 10 keys to the bottom left of the control select the JOG function, the arrow keys indicating direction, the circular arrow key with a W is for the fourth axis if fitted, the + and - keys are for JOG speed control, and are also used as 'feedrate override' keys.

MIRROR (Mill only) The X and Y axes can be mirrored in the program. When the mirror key is pressed, a menu of 4 options is displayed.

REPEAT Any number of blocks in programme can be repeated 99 times with specified offsets and feeds to 4 levels.

CW
CCW For circular movements

SCALE (Mill only) Movements inside or outside the program can be scaled in the range from 0.01 to 650%.

FLOAT
DATUM Enables a selected position to be used as zero in all axes.

DWELL Selects programmable dwell in the range of 0.1 to 9999.9 seconds

OFFSET Selects machine offset OR program offset.

COMP Selects tool radius compensation.

THREAD (Lathe only) Selects screwcutting facility 0.1mm to 6.4mm pitch.

INCH
MM Selects input of data in imperial or metric units.

ABS
INC Selects input of data in absolute or incremental format.

The group of 7 keys immediately under the display are used for spindle speed control and coolant control the keys from left to right will be as follows.

+ to manually increase the spindle speed
- to manually decrease the spindle speed
FWD (option) selects forward rotation of spindle
HIGH (option) selects high spindle speed range
REV (option) selects reverse rotation of spindle
LOW (option) selects low spindle speed range
OFF selects spindle off
ON Sets coolant on
OFF Sets coolant off

The spindle rotations and coolant controls can be used directly or used during programming.

Program control switches.

There are 3 program control switches namely:

1) STOP
2) START
3) MANUAL/SINGLE STEP/AUTO (MODE)

The third switch is a 3 position key switch: in MANUAL it enables manual data input (MDI), in single step position 1 depress of the start SWITCH will cause the next block of the program to be executed. In automatic 1 depress of the start switch will give automatic sequential execution of the program in memory, from the current position to the end of program.
The status of this 3 position switch is indicated on the top right hand of the display.

By depressing STOP (or PROG STOP) execution of the current block will stop. Execution may be restarted using the START key.

MACHINE codes (M Function and G codes)

The PNC 3 can be programmed by using both M and G codes or programmed direct using the dedicated keys (keyword system). A complete list of M and G codes follows, some of these codes are option dependant.

M functions for use outside of Program

M03 Spindle forward
M04 Spindle reverse
M05 Spindle stop
M08 Coolant on
M09 Coolant off
M20 Auxiliaries
M21 Input

M functions available inside the Program

M00 Program stop
M02 End of program
M03 Spindle forward
M04 Spindle reverse
M05 Spindle stop
M08 Coolant on
M09 Coolant off
M20 Auxiliaries
M21 Input

G codes for use outside of program

G01 Linear
G02 Circular CLW
G03 Circular CCLW
G04 Dwell
G21 Machine Scale
G33 Thread
G55 Machine Offset
G70 Imperial Units
G71 Metric Units
G90 Absolute Input
G91 Incremental Input
G98 Absolute Datum

G codes for use inside the Program

G01 Linear
G02 Circular CLW
G03 Circular CCLW
G04 Dwell
G10 Mirror X
G11 Cancel Mirror X
G12 Mirror Y
G13 Cancel Mirror Y
G20 Program Scale (replaces G21)
G33 Thread
G54 Program offset (replaces G55)
G70 Imperial Units
G71 Metric Units
G81 Repeat Function
G90 Absolute Input
G91 Incremental Input
G98 Absolute Datum
G99 Floating Datum

MOVEMENTS AND ASSOCIATED FEED INPUT

A movement in one or more axes can be input by pressing the desired axis key followed by the required dimensions. These coordinate dimensions and associated FEEDS may be input either as a single block of data which is to be executed immediately or as blocks of data which forms part of a programmed sequence.

Before coordinate dimensions keyed into the PNC 3 are executed a check is made to ensure that the MAXIMUM machine movements are not exceeded, should any be exceeded a warning message is displayed. RESET restores normal operation

The required FEED is keyed in as millimetres per minute or inches per minute. If no feed is programmed the default feed of 234mm/min is assumed.

CIRCULAR movements

Circular movements are defined by using the CW/CCW key, 1 press for clockwise, 2 presses counterclockwise (or by using G02 or G03) then defining the end points of the circular movement then pressing CW/CCW and inputting the circle centre coordinates.

Circular movements are limited to 1 quadrant per block.

When circular movements of less than one quadrant are being made it is not necessary to precisely know the coordinates of the end point of the movement in both axes. The PNC 3 can 'find' one of the coordinates. If this facility is to be used it must be arranged that the movement passes through the coordinate point of the unknown axis dimension before reaching the coordinate point of the known axis dimension at which point movement ceases, e.g. if the present position is X=0,Y=0 and we wish to make a circular clockwise movement to X=1 when Y is unknown, centred on X=3,Y=0 the Y end point programmed should be between Y=0.1 and Y=2.236 the true end point.

If incorrect i.e. impossible end points, are programmed the PNC 3 will move the table continuously in a circle attempting to find the programmed end point, the movement may be stopped by depressing either the smaller red STOP switch or the PROG STOP key on the PNC 3 Keyboard.

AUXILIARY functions

Auxiliary functions allow user assigned devices to be controlled i.e. switched on and off by the 4 integral PNC 3 auxiliary relays. Three types of auxiliary functions are supplied,

The three types are:

a) ON/OFF Auxilliary No. 3 and 4

b) MOMENTARY Auxilliary No. 2

c) PULSED Auxilliary No. 1

a) ON/OFF auxiliaries are set when programmed. If the auxiliary is programmed ON it will remain ON until programmed OFF. Such auxiliaries could be used to for example to control lubricant.

b) MOMENTARY auxiliaries are switched ON (if programmed to be on) only when the machine is at a programmed position. When the axes are moving momentary auxiliaries are always OFF. This type of auxiliary can be used to for example provide a table locking signal or to activate the main drilling head on a drilling machine.

c) PULSED auxiliaries provide a pulse output of 50 milliseconds (if programmed ON) each time the machine completes a program block.

INPUT facilities

The PHC 3 is equipped to be able to monitor 8 user assigned input signals from external switches. The condition of the switches may be checked to see if they are open or closed during program execution. If the switches are not in the programmed state, sequence execution waits until the switch signals are as programmed before proceeding. Switch levels may be programmed to be closed (ON), open (OFF) by the ADD and DEL keys. These inputs could be used for example to check if safety gaurds are in the correct position before movement, or to check the position of an auxilliary controlled hydraulic ram, or to make the PHC wait for some external signal from a robot before proceeding.

The auxiliary outputs and the inputs enable the PHC 3 to function not only as a precise positioning control system but also as a sequence controller.

BLOCK SEARCH facility

A program that is in PHC 3 memory may be run i.e. executed, either from the start of the program i.e. block 1, or from any point in the program using the block search facility.

DATA LINK facility

Four operations are possible using the Data Link they are:

1) Load Program from Data Link. (RS232C Serial Link)

2) Continue Program load from Data Link. (RS232C Serial Link)

3) Transmit program to data link. (Enhanced RS232C option only)

4) Print program i.e. transmit program to printer. (Centronics compatible parallel link)

Note 2, 3 and 4 are possible only if the PHC 3 Memory is loaded.

1) Enables a program to be loaded into PHC 3 memory from an external device either 1 block at a time or as a full program. Any Program previously contained in PHC 3 memory is overwritten i.e. destroyed. The format of the program data is shown in the RS232C Interface specification below.

2) Enables an additional program from an external device to be added to a program that already exists in PHC3 memory. The format of the program data is shown below.

3) Enables the contents of PHC 3 memory to be transmitted to an external device. The memory contents are transmitted as 'ASCII' characters in a similar format to that used by 1) and 2) above.

4) Enables the contents of PHC 3 memory to be transmitted to any printer with 80 columns or more which has a standard Centronics parallel interface.

PNC 3

Standard PNC 3 RS232 Interface Specification

The PNC 3 only needs 3 wires to implement an RS232 link, (at 4800 baud unless specified differently at ordering). They are Data Transmit, Data Receive and Signal Ground. The connection to the PNC 3 is via a 7 pin DIN socket (fitted to the unit rear) using pins 7, 6 and 2 for TxDa, RxDa and Ground respectively. TxDa is the output from the PNC 3 and RxDa is the input to the PNC3.

All information on the RS232 link is in the form of ASCII characters.

The PNC 3 will recognize the following characters:-

<STX>	02	start of transmission
<ETX>	03	end of transmission
0 to 9	30H to 39H	
A	41H	
C	43H	
D	44H	
E	45H	
F	46H	
I	49H	
L	4CH	
O	4FH	
P	50H	
R	52H	
S	53H	
T	54H	
X	58H	
Y	59H	
Z	5AH	
+	2BH	
-	2DH	
.	2EH	

The PNC 3 will use the following ASCII characters when transmitting:-

<ACK>	06H	acknowledge
<NAK>	15H	not acknowledge
?	3FH	

Any information i.e. each block, transmitted to the PNC 3 must be preceded by <STX> and terminated by <ETX>.

When the PNC 3 has processed the data and carried out the instructions contained therein, it will respond with either <ACK> (if everything was okay) or <NAK> if some error occurred.

If the PNC3 has responded with <ACK>, <NAK> or ? then this also indicates that it is waiting for more data from the interface.

If an unrecognised character is received by the PNC 3 (see 2, above) then it will cause the PNC 3 to transmit a "?" once the <ETX> has been received. In this case the PNC 3 will not take any action on the received data but will wait for more data from the interface.

The PNC 3 will respond with (NAK) if the data received constitutes a move to a postion outsides the table limits.

The maximum amount of data transmitted to the PNC 3 in one go will be one program block.

A linear move program block can contain any of the following (to a maximum of 60 (for 2 axis), 80 (for 3 axis) characters):-

Data	Meaning
X<d>	Move in X axis to position <d>
Y<d>	Move in Y axis to position <d>
FX<p>	Set XY feedrate to <p>
Z<d>	Move in Z axis to position <d>
FZ<p>	Set Z feedrate to <p>

Where <d> is a decimal number
<p> is a decimal number in range 0.1 to 1536

Leading and trailing zeroes are not necessary when specifying <d> <p>.

If the program block contains L as the last character (i.e. the character before the <ETX>) then that program block will not be directly executed but will be loaded into the next available slot in the PNC 3's memory. By sending a succession of blocks with L as the last character a complete program can be built up. Each succesive block will be automatically loaded into the next available slot in the PNC's memory. If there are no more free slots in memory then the PNC will respond with <NAK>.

If the transmitted data consists of <STX> R <ETX> then the PNC 3 will execute the current program held in its memory starting at the first block and will not respond with <ACK> until the program has been successfully run. The PNC 3 will respond with <NAK> if any error occurs during program execution

N.B. The PNC 3 must be switched to AUTO for the complete program to be run.

If the program block transmitted to the PNC 3 does not contain the character L, then that block will be directly executed and the PNC 3 will respond with <ACK> on successful completion of the block or <NAK> if any error occurred. Directly executable blocks can be interspersed with loadable blocks if so desired.

If the transmitted data consists of <STX> E <ETX> then the PNC 3 will clear out any program currently in its memory.

Example

Suppose the following data was transmitted to the PNC 3

<STX>X12.94Y15FX25.7Z14FZ100<ETX>

This would result in the PNC 3 moving from its current position to
X = 12.94
Y = 15.0
Z = 14.0

The XY axis would move at a feedrate of 25.7mm/min and the Z axis would move at a feedrate of 100mm/min. When the last axis reaches position the PNC 3 would respond by transmitting <ACK> to the interface.

To specify a circular move the following basic format must be adhered to:-

(N.B. if the PNC3 is controlling a lathe then Z replaces Y

X<d> Y<d> CCX<XCENTRE> Y<YCENTRE> for Clock Wise Moves

or X<d> Y<d> CAX<XCENTRE> Y<YCENTRE> for Anti C.W. Moves

This basic format can be followed by feedrate specifiers, Z axis moves, etc in the normal way.

If the PNC 3 is controlling a lathe then the following format can be used to specify a screwcutting move.

<STX> S#<diameter> P<pitch> D<depth> C<no. of cuts> L<length> Z<start posn> <ETX>

Where # can be either E or I for External or Internal threads.

The following format can be used to specify a tool change block.

<STX> T<tool No. 1 to 16> <ETX>

PNC3 RS232 Interface Specification

Auxiliary outputs can be controlled using the following format:

Data	Meaning
A<n>+	Turn auxiliary<n> on
A<n>-	Turn auxiliary<n> off

where <n> is in the range 1 to 4

Input switches can be tested using the following format:

Data	Meaning
I<n>+	Wait forinput <n> to be on
I<n>-	Wait forinput <n> to be off

where <n> is in the range 0 to 7

Note the PNC 3 will not respond with <ACK> until the desired input has achieved the correct level. The PNC 3 can be forced out of waiting indefinitely for the input by pressing <RESET>.

The following block can be used to reset the PNC 3 to a known position. It actually causes the PNC3 to act as it the <ZERO> button had been pressed, i.e. each axis in turn will drive to its datum position. The format is as follows:

<STX>0<ETX>

Program stop (or inspection pause) blocks can be inserted into a program by the following

<STX>P<ETX>

If the PNC3 is fitted with programmable spindle speed control, the following types of block can be used to control the spindle.

Data	Meaning
FSR<n>	Spindle reversedirection, <n> r.p.m.
FSF<n>	Spindle forwarddirection, <n> r.p.m.
FSO	Spindle off

where <n> isin the allowable range for that particular machine.

PNC3

If the PNC3 is fitted with spindle High/Low speed control, the following types of block can be used to control the spindle.

DATA	MEANING
FSF	Spindle High Speed
FSS	Spindle Low Speed
FSO	Spindle OFF

PNC 3 Enhanced RS232 Interface Specification

Section A Input to PNC3

The enhanced RS232 interface allows a host computer to use all the facilities of the PNC3. The enhanced specification includes comprehensive error message transmission. Each block must start with <STX> and end with <CR> but these characters have been omitted from the following text for clarity.

(H.B. STX = 02H, CR = 0DH)

The PNC will ignore the following characters: General comments of the STANDARD RS232 Interface Specification apply.

Null	00H
Tab	09H
Space	20H
Delete	7FH

As with the standard interface, blocks with "L" as the last character before the <CR> will not be executed directly but will be loaded into the PNC3's internal memory.

1. Linear Moves

   Mill

   G01 Xnnnn Ynnnn FXnnnn Znnnn FZnnnn

   Lathe

   G01 Xnnnn Znnnn FXnnnn

2. Circular Moves

   Mill Clockwise

   G02 Xnnnn Ynnnn FXffff Znnnn FZffff CXcccc Ycccc

   Counter Clockwise

   G03 Xnnnn Ynnnn FXffff Znnnn FZffff CXcccc Ycccc

   Lathe Clockwise

   G02 Xnnnn Znnnn FXffff CXcccc Ycccc

   Counter Clockwise

   G03 Xnnnn Znnnn FXffff CXcccc Ycccc

   nnnn = X,Y or Z position in mm or inches
   ffff = Feedrate in mm/min or ins/min
   cccc = XY circle centre point in mm or inches

3. Dwell

   G04 Ddddd

   where dddd - dwell time in the range 0.1 to 9999.9 seconds

4. Mirror functions

   Mirror X

   G10L

   Cancel Mirror X

   G11L

   Mirror Y

   G12L

   Cancel Mirror Y

   G13L

Note that these blocks cannot be executed directly but must be part of a program load.

5. Scaling function
   Program Scale
   G20 SssssL
   Machine Scale
   G21 Ssssss

where ssss is the percentage scaling required in the range 0.01% to 650%

6. Thread cutting move
(Only on lathes)
   Internal Thread
   G33 I<Diameter>P<pitch>D<depth>C<no. of cuts>L<length>Z<start posn>
   External Thread
   G33 K<diameter>P<pitch>D<depth>C<no. of cuts>L<length>Z<start posn>

7. Cutter Radius Compensation
(Only on Mills)
   Cancel Tool Compensation
   G40
   Tool Compensation Right
   G41
   Tool Compensation Left
   G42

8. Offsets
   Program offsets
   Mill
   G54 Xnnnnn Ynnnnn Znnnnn L
   Lathe
   G54 Xnnnnn ZnnnnnL
   Machine offsets
   Mill
   G55 Xnnnnn Ynnnnn Znnnnn
   Lathe
   G55 Xnnnnn Znnnnn

9. Imperial Units
   G70

10. Metric units
   G71

11. Repeat loops
   Mill
   G81R<start blk>E<end blk>N<no of times>Xnnnnn Ynnnnn FXffff Znnnnn FZffff L
   Lathe
   G81R<start blk.>E<end blk.>N<no. of times> Xnnnnn Znnnnn FXffff L

   Where the X,Y and Z dimensions are optional incremental offsets and the FX and FZ values are optional feedrates.

12. Absolute units
   G90

13. Incremental units
   G91

14. Absolute Datum
   G98

15. Floating Datum
   G99L

16. Program Stop
   M00L

17. Spindle Speed Control
For units with programmable spindle speed
Spindle Forward
M03 S<spindle speed forward rpm>
Spindle Reverse
M04 S<spindle speed reverse rpm>

For units with 2 speed settings
High Speed
M03
Low speed
M04

18. Spindle stop
M05

19. Tool change
M06 T<tool number>

20. Coolant control
Coolant on
M08
Coolant off
M09

21. Auxiliary output and Input control
Aux outputs
To turn auxiliary <n> on
M20 A<n>+
To turn auxiliary <n> off
M20 A<n>-

Combinations of different auxiliaries to be on/off can be built up
e.g.
M20 A1+A2-A3+A4-
will turn on Aux 1 and Aux 3 and turn off Aux 2 and Aux 4

Note: The auxiliaries do not necessarily have to be input in order.

Inputs
To wait for input <n> to be high
M21 I<n>+

To wait for input <n> to be low
M21 I<n>-

Combinations of conditions can be tested
e.g.
M21 I1+I2+I3-I4-
will wait until Inputs 1 and 2 are high and Inputs 3 and 4 are low

Note: the inputs do not necessarily have to be input in order.

22. To Run a Program
R
will cause the whole program to be executed

B<nnnn> will cause the program to be executed from block nnnn

23. To Erase a Program (i.e. to clear PNC3 memory)
E

Section B Output from PNC3

1. Providing the PNC3 has received valid data as specified in Section A it will respond with the character <ACK>
<ACK> = 06H

This signifies that the PNC3 is ready to received more data.

2. If some error has occurred, the PNC3 will respond with the following:

<NAK>nn
Where nn is a two digit error code
<NAK> = 15H

The PNC 3 will then be ready to receive more data

The error codes are defined in the following table.

3. If reset is pressed on the PNC 3 while in RS232C mode with the PNC3 waiting for data then it will transmit an <ESC> and return to MD1 mode.

PNC3 RS232 ERROR CODES (Enhanced specification only)

Error No.	Meaning
01	Not assigned
02	Illegal G code received
03	Illegal M code received
04	Illegal character for this block
05	Move exceeds machine limits
06	Block not completed successfully
07	This block not allowed to execute immediately (Must be ended with L)
08	This block not allowed in a program
09	Attempt to run to non existant block
10	PNC memory full
11	Block too big for input buffer
12	X axis drive system fault
13	Y axis drive system fault
14	Z axis drive system fault
15	W axis drive system fault
16	Incomplete block received
17	Error in input coordinate
18	Error in input feedrate
19	X and Y moves not present in circular move
20	Position not known Machine must be driven to datum
21	Circular move not within a quadrant
22	Dwell value error
23	Scale value error
24	Tool number error
25	Auxiliary selection error
26	Input selection error
27	Repeat start block error
28	Repeat end block error
29	Number of repeats error
30	Nest error in repeat levels
31	Error in Repeat offsets
32	Error in offset block
33	Spindle speed input exceeds limits
34	Spindle direction is opposite to present direction (Stop spindle first)
35	Error when driving to datum
36	Threading input error
37	Spindle speed wrong for threading
38	Spindle drive system error

TRANSMIT PROGRAM TO DATA LINK.

When function 4 is selected in the DATA LINK menu, the PNC 3 responds with a new menu:-

1) COMPLETE PROGRAM

2) PART OF PROGRAM

If 1 is selected then the whole of the program in memory is transmitted via the RS232c link.

If 2 is selected then the user is requested to enter the start and end blocks. When this has been done, the portion of the program selected is transmitted via the RS232c link.

(N.B. During transmission the message "storing to RS232c Serial Date Link" is displayed).

The data transmitted by the PNC3 is exactly the same as it expects to receive when loading from the RS232c link.

During transmission the RxDa line is used as a busy signal thus:-

if RxDa is low then the PNC3 will transmit
if RxDa is high then transmission is inhibited at the end of the current character and the PNC3 will wait for a low level before continuing to transmit.

LOAD facility (LOAD/END)key

This enables PNC 3 memory to be 'loaded' using the PNC 3 Keyboard. The task to be accomplished by the machine is broken down into a sequence of blocks which are then executed consecutively. A block may consist of a point to which the machine should move which is defined using 1,2,3 or 4 coordinates (dependant upon the PNC 3 options fitted), or the auxiliary setting required or the level(s) of input signals required. (Auxiliary functions and the input facility are described elsewhere). A block may also consist of a REPEAT instruction, or a Float Datum instruction, or an OFFSET instruction, or a SUBROUTINE call (Option), or a 'SCALE' instruction, or in fact any G OR M code facility.

Two different LOAD operations are possible:

1) LOAD memory from keyboard
2) CONTINUE memory load from keyboard

1) LOAD is used to enter a new program into PNC 3 memory. Any previously loaded program is overwritten i.e. destroyed.

2) Continue memory load from keyboard enables an existing program to be continued i.e. extended.

Upon completion of a LOAD or a CONTINUE memory load the PNC 3 displays the program number, how many blocks there are in memory and how much memory remains for a period of 6 seconds after which the PNC 3 displays show normal data, any key press clears the display.

Should too much program data be keyed into the PNC 3 such that the memory becomes full, "memory is full" is displayed and no more data can be entered. Normal operation can be restored by using the RESET Key.

CASSETTE operations

The integral magnetic cassette recorder enables programs to be permanently stored for future use

Six different cassette operations are possible:

1) Rewind cassette
2) Erase cassette
3) Find the end of cassette data
4) Load program from cassette
5) Continue program load from cassette
6) Store program to cassette.

When the CASSETTE facility is initially selected a check is made to see if there is a cassette in the unit, if not 'NO TAPE LOADED' is displayed, depression of RESET restores normal operation. If the cassette tape 'clear leader' is detected when a cassette operation is selected the PNC 3 runs the cassette for 5 seconds, if the clear leader is still detected Tape Error is displayed, depression of RESET restores normal operation. If the clear leader has passed the cassette read head the selected cassette operation continues. Some cassette tapes have very long clear leaders and it may be necessary to reselect the cassette operation required thus giving the cassette tape a further 5 seconds to pass the clear leader. If the end of tape clear leader is detected during a cassette operation e.g. during a cassette load "TAPE ERROR" is displayed, depression of RESET restores normal operation.

1) REWIND CASSETTE enables a cassette to be rewound to the start, i.e. to the clear leader, this operation should be performed prior to recording onto a new cassette and it should be performed before a cassette program is loaded into PNC 3 memory. The rewind operation may be stopped by pressing the RESET key.

If important data is to be stored which must not be overwritten, cassettes can be protected by punching out two holes at the top of the cassette.

If a cassette having had the two holes made is placed in the PNC 3 and effort is made to record a program, the message "CASSETTE IS WRITE PROTECTED" will be displayed.

2) ERASE CASSETTE enables a cassette to be erased i.e. cleared of programs. The cassette should first be rewound using option 1, i.e. rewind cassette. When a cassette is erased 'PROGRAM END' is recorded at the start of the cassette to indicate that this is the end of the cassette. The cassette erase operation takes approximately 3 minutes for a 50 ft long cassette tape.

3) FIND END OF CASSETTE DATA. This command brings the tape to the end of the recorded programs i.e. to the message "Program end found" the cassette is then ready for other programs to be stored.

4) LOAD PROGRAM FROM CASSETTE enables a program which is on the cassette tape to be loaded from the cassette into PNC 3 memory. The operator may now look for the next cassette program identifier located by despressing key 4. The program number is requested and by giving the program number and pressing the ENTER key the PNC 3 will search for the number, displaying in turn the numbers on tape which are found, until the program required is found or until the tape end if found.

If the program number is not known, by pressing key 4 followed by ENTER the first program on tape will be found and its program number displayed. Press ENTER key to load into memory or press any other key to proceed to the next program on tape. This procedure may be carried on until tape end is found. Depression of RESET restores the cassette menu.

When data is loaded from the cassette unit into PNC 3 memory a check is made on the validity of the data and if an error was detected during the load process "TAPE ERROR" is displayed, and the memory will not be loaded. If RESET is pressed normal operation is resumed.

Cassette data is validated as follows: when a program or an identifier is stored onto the cassette tape an algorithm is computed the result of which is dependant upon the precise data stored. The numerical result of this algorithm is recorded at the end of the data. When the program or identifier data is subsequently loaded into PNC 3 memory the same algorithm is computed and the numerical result is compared with the prerecorded value, if a difference is detected "TAPE ERROR" is displayed.

5) CONTINUE PROGRAM LOAD FROM CASSETTE.

This facility enables program data contained in PNC 3 memory to be continued i.e. extended, by a program previously recorded onto tape. This facility enables programs to be 'merged' to form larger programs.

6) STORE PROGRAM TO CASSETTE.

This facility enables program data contained in PNC 3 memory to be stored using the integral cassette recorder onto cassette tape. The program is stored after a cassette identifier has been keyed in. The cassette identifier (Program number) can be from 1 to 6 numerals.

Each program is stored as 4 elements separated by blank tape

i) The cassette program identifier
ii) The program
iii) The tool offsets associated with the program
iiii) A cassette end 'END'

The cassette end is stored to enable the end of the recorded tape to be found when additional programs are to be stored, as each cassette tape can contain many programs. When a program is stored the cassette tape is initially rewound for a short time and then the 3 elements are recorded, this removes any previously recorded cassette END.

It is stongly recommended that more than one recording of the program is made in case one copy becomes corrupted.

EDIT facility

This facility enables a program that is in PNC 3 memory to be edited. When the edit mode is selected the operator may choose to display any block of data.
Seven operations are possible in Edit mode, they are:

1) Previous
2) Next
3) Replace
4) Delete
5) Add
6) Alter
7) Search

During edit operations generally 3 blocks are displayed. The selected operation is performed on the bottom block displayed.

1) Previous - Depression of key 1 decrements the block numbers displayed by 1

2) Next - Depressing key 2 increments the block numbers displayed by one

3) Replace - The bottom block displayed may be replaced. This facility differs from the Alter facility in that the replaced block is completely deleted and the new block is inserted.

4) Delete - The bottom block displayed may be deleted by using the delete

5) Add A new block of data may be added to a programmed sequence. The data is inserted into the sequence immediately before the bottom block displayed, before ADD was depressed, and all subsequent block numbers in the programmed sequence will be incremented by 1.

Note: If it is desired to add a block or a number of blocks to the end of a programmed sequence "The continue memory from keyboard" facility should be used.

6) Alter - The data programmed in the bottom displayed block can be altered using the ALTER facility. The data to be replaced is Keyed in together with its identifier, other data contained in the block will remain unchanged.

If an attempt is made to change non existing data a warning will be displayed. If this occurs the replace function, key 3 will have to be used. RESET restores normal edit operation.

7) Search - The search facility enables any block in the program to be displayed.

JOG facility

The machine can be jogged into position by depressing the directional arrow in the jog button cluster found bottom left on the panel. One press will give one step. If a jog key is held continuous movement is made. More than one axes may be moved at once. The + or - keys allow the jog speed to be increased or decreased.

SCALE facility

Program Scaling can be accomplished outside of a program i.e. overall scaling, or inside a program i.e. program scale. Program scale allows the user to key in a value in the range of 0.01% to 650% as a scaling factor for all subsequent X & Y dimensions, Z axis dimensions remain unchanged. Its effect can be cancelled by inserting a Program Scale of 100%.
Overall scale is permitted outside program loading sequence. It allows the user to key in a value in the range 0.01% to 650% as a scaling factor for the complete program. It is automatically set to 100% whenever a new program is loaded.

NOTE Any program scales active in the program will be further scaled by this overall scale function so dimensions can be reduced by up to 0.01 x 0.01% i.e. 100,000,000 times or increased by up to 6.5 x 6.5 i.e. 42.25 times.

MIRROR facility

The mirror program menu includes:

1) Mirror X
2) Cancel Mirror X
3) Mirror Y
4) Cancel Mirror Y

Mirror X: This function is only permitted as part of a program loading sequence. It causes the PNC to establish an axis of symmetry at its current X position. All succeeding blocks are then reflected about this axis.

Note:- This function uses the actual X position that it has attained as its axis of symmetry taking into account all scaling factors, any previous X negates and all offsets including repeat offsets.

Mirror Y: This function is identical to 1) Mirror X except that it acts about the Y axis.

OFFSET facility

The PNC 3 offset facility enables programmed dimensions to be offset to any point within the machine movement limits. Seperate offsets within and outside the programmed sequence are permitted.

REPEAT facility

The repeat facility enables specified sections of a programmed sequence to be repeated with specified offsets. The repeat facility is only available within a programmed sequence. The data required to specify a repeat is:

1) The start block number to be repeated
2) The end block number to be repeated
3) The number of repeats required
4) The required offset dimensions with required FEED changes if any.

Repeats may be programmed up to a nested level of 3, should this level be exceeded "Nest error in repeat levels" is displayed. RESET restores normal operation.

When each repeat is programmed the PNC 3 checks all the dimensions being repeated, adding the programmed offset to the programmed number of times to ensure that the machine movement limits are not exceeded. This process may take a few seconds. Should the limits be exceeded "Move exceeds machine limit' is displayed, RESET should be depressed and corrected data be keyed in before programe execution is continued.

MAINTENANCE

ROUTINE INSPECTION AND MAINTENANCE SHOULD BE CARRIED OUT TO THE FOLLOWING SCHEDULE :-

PERIOD	MAINTENANCE REQUIRED
DAILY	CHECK OIL RESERVOIR OPERATE 'ONE SHOT' SYSTEM CLEAN AWAY SWARF
WEEKLY	CLEAN MACHINE THOROUGHLY CHECK COOLANT TANK
SIX MONTHLY	CHECK TABLE, CROSS SLIDE AND KNEE STRIPS. CHECK SPINDLE DRIVE VEE BELT.
ANNUALLY	CHECK MACHINE ALIGNMENTS AND ACCURACY. CHECK AXIS DRIVE BELTS.

ADJUSTMENT OF GIB

1. The table is provided with a full length, hand scraped, tapered gib on the front side of the saddle. There is an adjusting screw at each end. To adjust the gib, tighten the two screws until a slight drag is felt when moving the machine by hand. If the table is not tight enough, loosen the adjusting screw on the small end of the gib and tighten the other end. If the feel is too tight, reverse the procedure.

ADJUSTMENT OF SADDLE AND KNEE GIBS

1. To properly adjust the feel of the cross movement and the vertical movement, follow the same procedure as described above.

CHANGING SPINDLE SPEEDS

1. Loosen the two locking bolts on the sides of the motor. Pull back the tension lever.
2. Move the belt to the desired groove.
3. Set belt tension and lock the two locking bolts.

REMOVING MOTOR

1. proceed to loosen belt according to above instructions.
2. Take off the motor and one of the pulleys.
3. Loosen the 8 hexagon socket screws in the upper cover of the belt housing. Lock uniformly the 3 small hexagon socket screws and take off belt housing cover.
4. Loosen the 4 hexagon socket screws and take off aluminum cover.

STANDARD EQUIPMENT

1 TOOL BOX

1 OIL CAN

2 SCREW DRIVERS

4 ALLEN KEYS 3,4,5, & 6

4 SPANNERS, 12/13, 14/15,16/17 & 19 RING

1 MINI CASSETTE

1 POT OF PAINT

1 FUSE 20 MM 250 V 5A

1 FUSE 20 MM 3.15 ANTI SURGE

1 FUSE 20 MM 1.6A

LUBRICATION

THE MILLING MACHINE IS FITTED WITH A 'ONE SHOT' LUBRICATION SYSTEM. THE RESERVOIR ON THE SYSTEM SHOULD BE FILLED TO THE CORRECT LEVEL AND A CHECK TO SEE IF OIL IS BEING PUMPED TO THE SLIDES AND BALLSCREWS BEFORE THE MACHINE IS OPERATED.

OPERATE THE MANUAL PUMP DAILY.

USE S.A.E.10 FOR THE LUBRICATING SYSTEM AND A GOOD QUALITY MACHINE GREASE FOR THE KNEE BRACKET GEARS (READILY ACCESSIBLE FROM THE UNDERSIDE OF KNEE).

THE SPINDLE AND SPINDLE BEARINGS ARE LUBRICATED VIA THE OIL RESERVOIR LOCATED AT THE FRONT OF THE MACHINE HEAD, TO THE OPERATOR'S LEFT OF THE SPEED CHART.

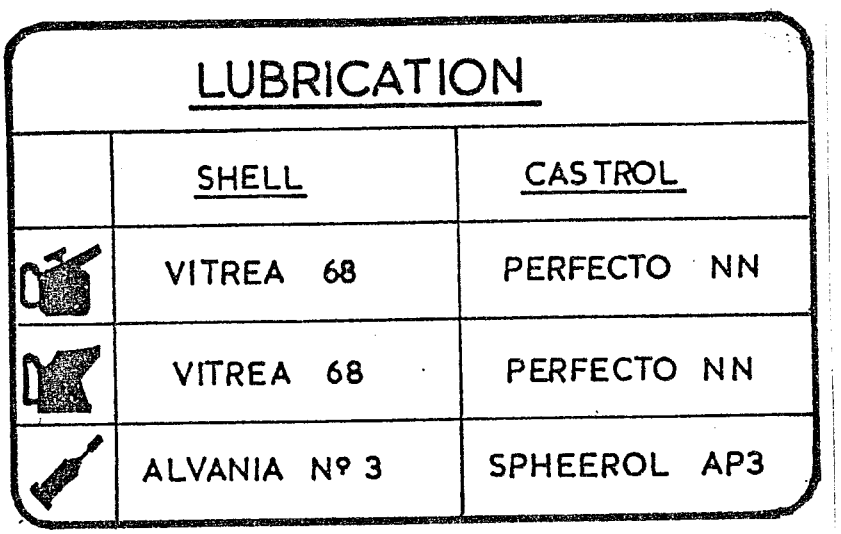

14983

CLEANING

THE MACHINE ON DELIVERY WILL HAVE THE BRIGHT SURFACES COATED WITH A PROTECTIVE SOLUTION. THIS MUST BE REMOVED BY USING A KEROSENE BASE SOLVENT BEFORE ANY ATTEMPT IS MADE TO MOVE THE SLIDES OR OPERATE THE MACHINE.

FITTING CONTROL UNIT (PNC.3.)

THE CONNECTION BETWEEN THE MILLER AND THE PNC.3 CONTROL UNIT IS MADE THROUGH TWO 24 PIN PLUG AND SOCKETS. THESE PLUGS ARE NUMBERED NO. 1 AND NO. 2 WITH A POLARIZING PIN FITTED TO NO. 1.

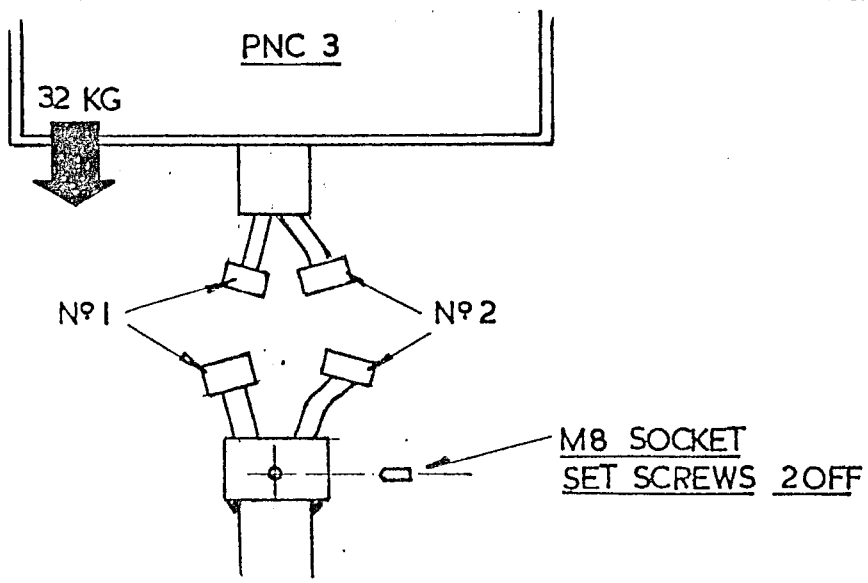

ELECTRICAL SUPPLY CONNECTION

THE REGULAR ELECTRICAL MAINS SUPPLY TO THE MACHINE IS 3 PHASE. 220V/60HZ.

CONNECT THE MAINS SUPPLY TO THE ISOLATOR BOX LOCATED ON THE LEFT HAND SIDE OF THE MACHINE.

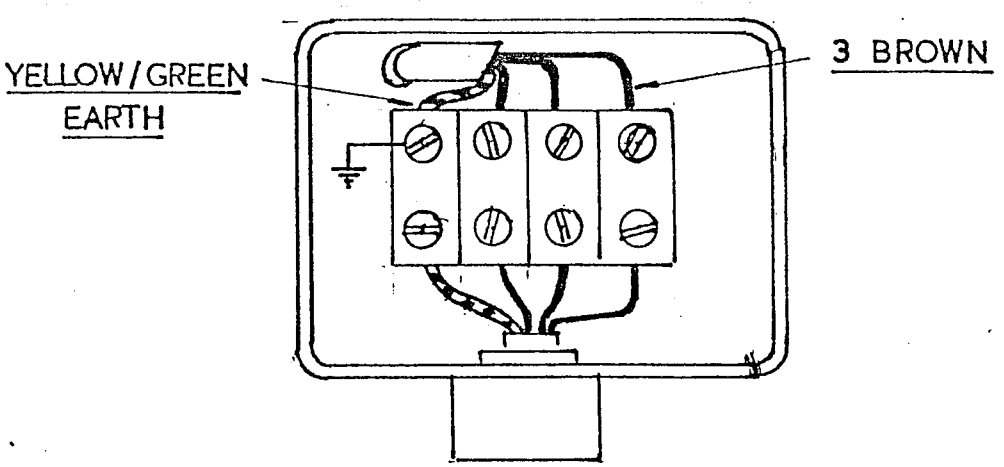

ONLY A COMPETENT ELECTRICAL ENGINEER SHOULD COMMISSION THE MACHINE.

/CONTINUED -

LEVELLING

FOUR JACKING PADS MUST BE FITTED AT EACH CORNER OF THE MACHINE BASE.

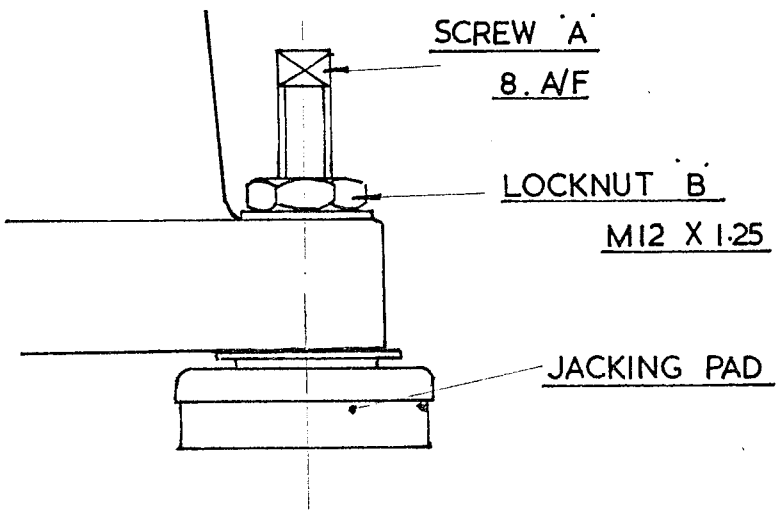

THOROUGHLY CLEAN THE TABLE SURFACE AND,USING A PRECISION MACHINE LEVEL, ALTERNATELY IN THE LONGITUDINAL AND THE TRANSVERSE POSITIONS, LEVEL THE MACHING USING THE JACKING PADS THUS:-

WITH LOCKNUT 'B' SLACK, ROTATE SCREW 'A' UNTIL THE TABLE IS LEVEL.

TIGHTEN LOCKNUT 'B'.

LIFTING

THE MACHINE CAN BE LIFTED FROM THE HORIZONTAL HEAD RAM AT THE POINT BETWEEN THE MILLING HEAD AND TOP CASTING. CHECK TO ENSURE THAT THE LIFTING SLINGS ARE OF THE CORRECT CAPACITY TO LIFT THE WEIGHT OF THE MACHINE AND THAT THE SLINGS ARE IN GOOD CONDITION.

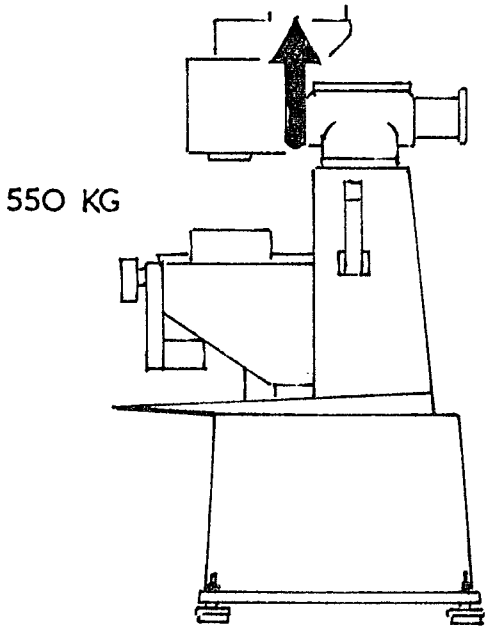

FOUNDATION

THE MACHINE SHOULD BE SET ON A FIRM CONCRETE BASE AND FIXED USING THE FOUR BOLTING DOWN HOLES (12 DIA.) LOCATED AT EACH CORNER OF THE BASE CASTING.

SEE DRAWING NO. SK.727/1.

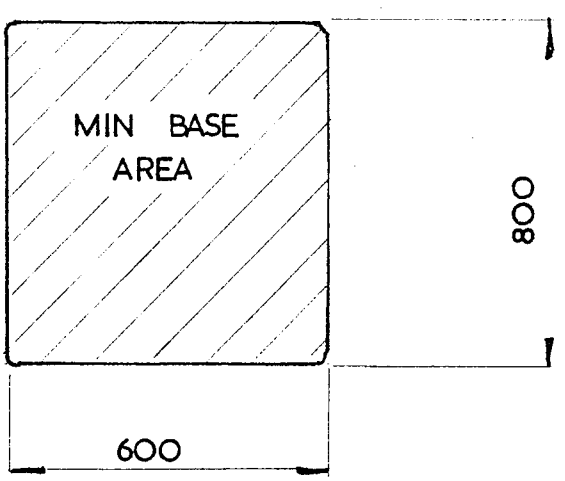

/CONTINUED -

DRAWING No.	1
DESCRIPTION	
PROGRAMME No.	1
MATERIAL	
PROGRAMME BY	
DATE	

EASIMILL 3

TOOLING & SETTING DATA

N	G	M	X	Y	XY FEED	CIRCULAR MOVEMENT		Z	Z FEED	REMARKS
						XC	YC			
	55		X 100	Y 100						DATUM POSITION
01			X-50	Y 0	F 1500			Z 0	F 1500	SAFE POSITION
02		06								TOOL 1
03		03								SPINDLE ON
04										
05			X 10	Y -10						
06								Z -5	F 75	
07			X 60		F 75					1
08				Y -18						2
09			X 10	Y -10						3
10								Z 3	F 1000	
11		05								SPINDLE OFF
12			X -50	Y 0	F 1500					SAFE POSITION
13		02								END.

FIG 1

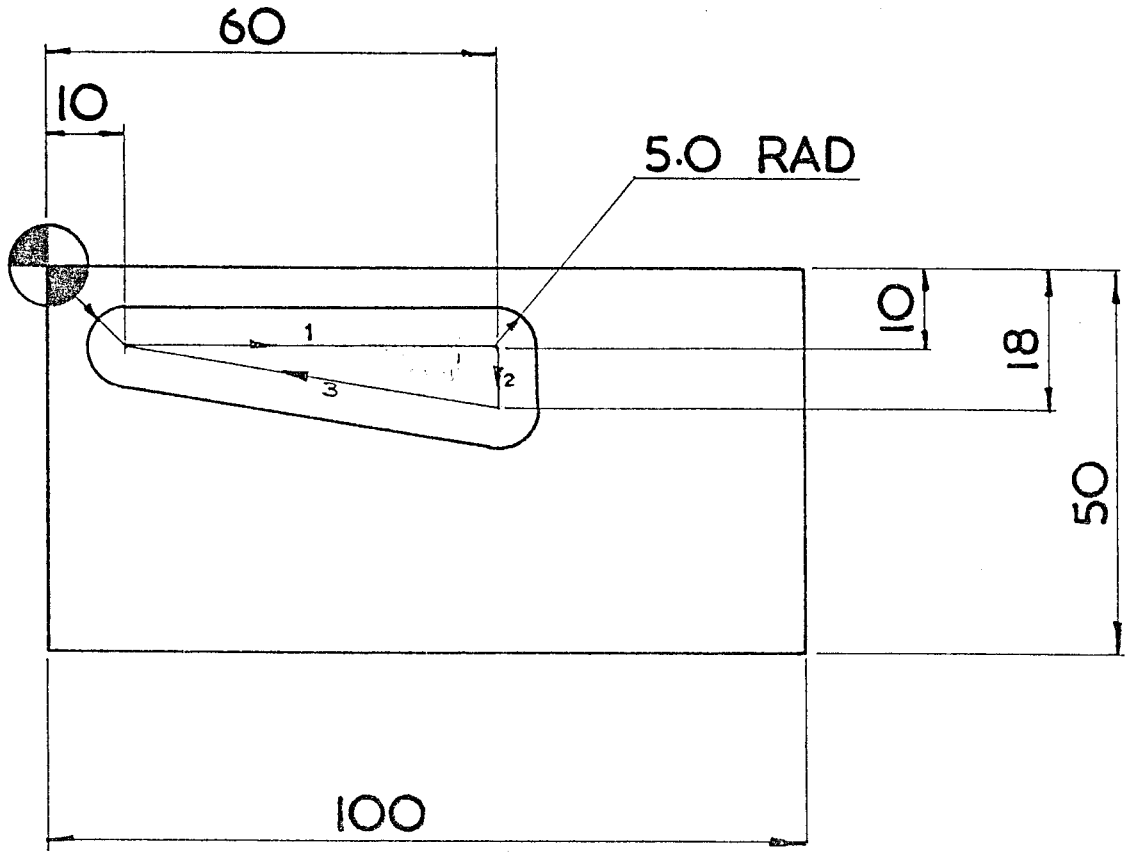

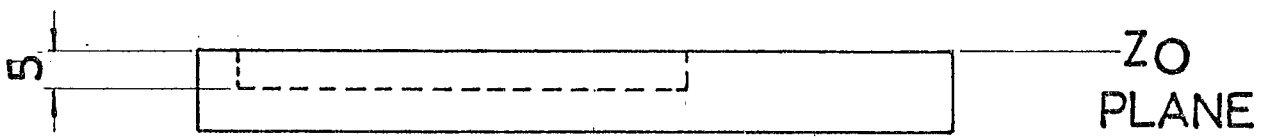

TOOL Nº 1
10 DIA SLOT DRILL

DRAWING No.	2
DESCRIPTION	
PROGRAMME No.	2
MATERIAL	
PROGRAMME BY	
DATE	

EASIMILL 3

TOOLING & SETTING DATA

N	G	M	X	Y	XY FEED	CIRCULAR MOVEMENT		Z	Z FEED	REMARKS
						XC	YC			
01			X -50	Y 0	F 1500			Z 0	F 1500	SAFE POSITION
02		06								TOOL 1
03		03								SPINDLE ON
04								Z 3		
05	42									CUTTER COMP.
06			X 0	Y 0						
07								Z-5	F 100	SINK 5 DEEP
08			X 5		F 100					
09	02		X 25	Y 10		25	-15			
10	02		X 45	Y 0		25	-15			
11			X 50							
12				Y 40						
13	03		X 45	Y 55		25	40			
14	02		X 25	Y 45		25	70			
15	02		X 5	Y 55		25	70			
16	03		X 0	Y 40		25	40			
17				Y 0						
18								Z 3	F 1500	
19		05								SPINDLE OFF
20	40									CANCEL COMP.
21			X -50	Y 0	F 1500					
22		02								END.

FIG 2

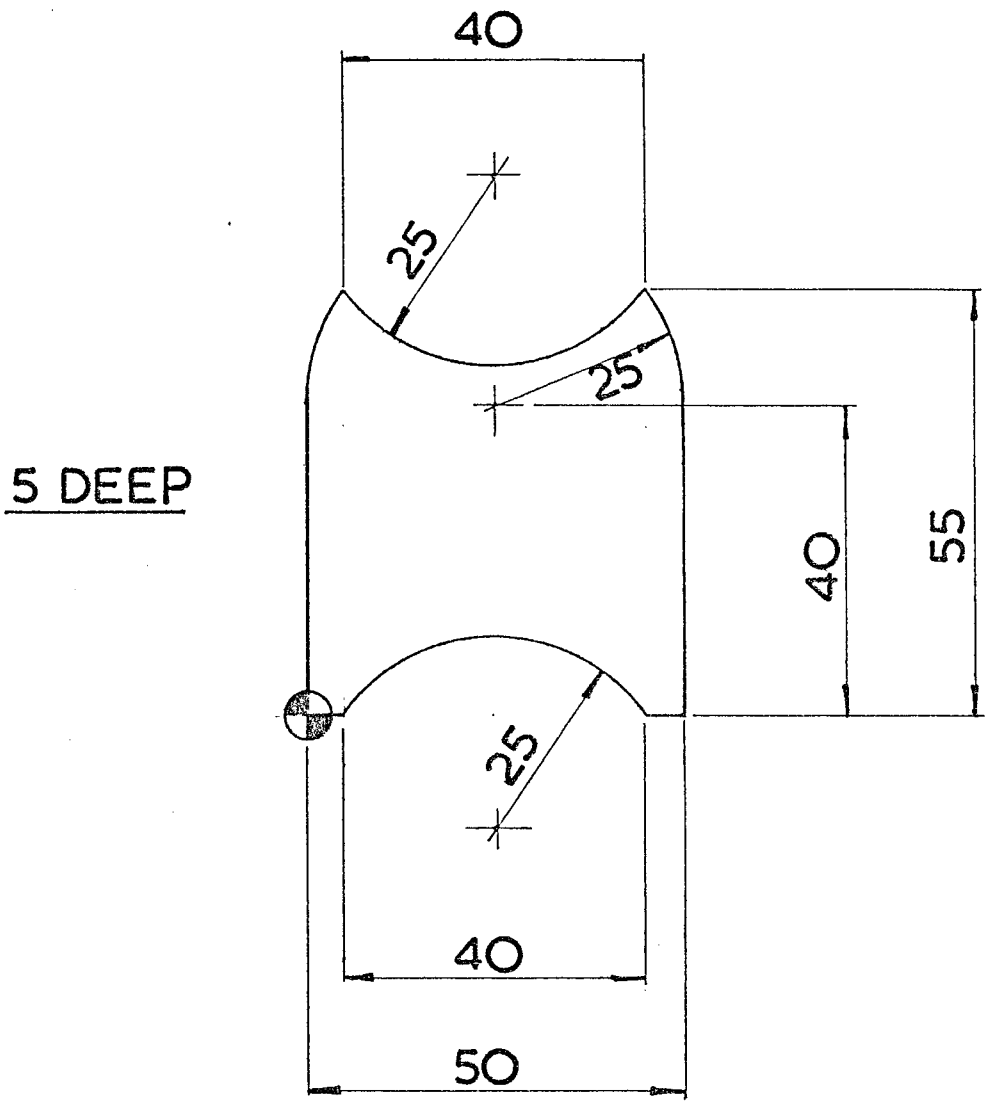

DATUM POSITION G55 X 120 Y50

TOOL Nº 1 6 DIA SLOT DRILL

Z0 DIMENSION = TOP OF WORKSURFACE

DRAWING No.	3
DESCRIPTION	
PROGRAMME No.	3
MATERIAL	
PROGRAMME BY	
DATE	

EASIMILL 5

TOOLING & SETTING DATA

N	G	M	X	Y	XY FEED	CIRCULAR MOVEMENT XC	CIRCULAR MOVEMENT YC	Z	Z FEED	REMARKS
01		03								SPINDLE ON
02			X 0	Y 0	F 1500			Z 3	F 1500	
03	41									CUTTER COMP.
04			X 0	Y 0						
05								Z -3	F 100	SINK IN 3 DEEP-
06				Y 15	F 100					
07			X 20							
08	02		X 50	Y 28.544		50	-11.456			
09	02		X 80	Y 15		50	-11.456			
10			X 100							
11				Y 0						
12								Z 3		
13	40									CANCEL COMP.
14	54		X 108							PROGRAMM OFFSET 108MM
15	10									MIRROR X
16	12									MIRROR Y
17	81	FROM 2 TO 14		REPEAT	1					
18								Z 10		
19		05								SPINDLE OFF
20	13									CANCEL MIRROR Y
21	10									CANCEL MIRROR X
22			X -50	Y 0						SAFE POSITION
23		02								END.

FIG 3

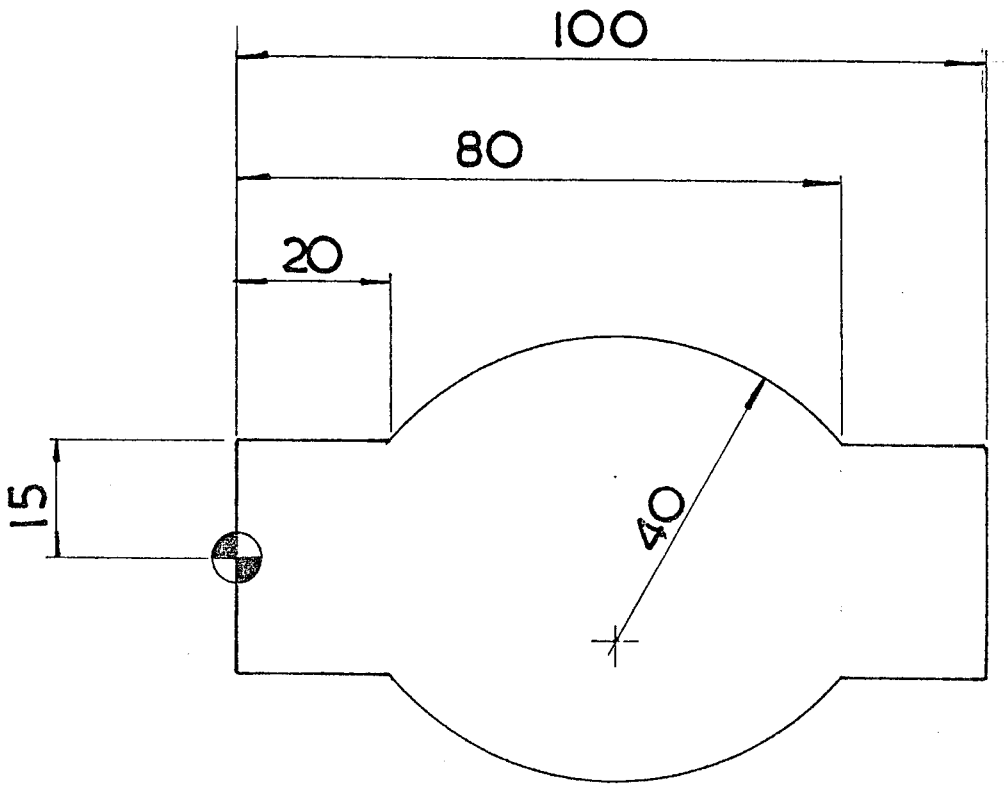

EASIMILL 3

Easimill 3 is a 3 axis CNC Turret Mill designed as an efficient production machine tool for small and medium sized components, and also for training or re-training operators.

The machine combines precision with the very latest micro-processor technology allowing compatibility with the full range of Denford CAD/CAM, DNC and FMS Systems.

GENERAL SPECIFICATIONS

CNC CONTROL SYSTEM

1. 490 x 290 x 335 mm Self Contained Console.
2. Green on Black 9″ V.D.U. with Anti-glare screen and outlet to external T.V. Monitor.
3. Alpha numeric keyboard allowing full Manual Data Input.
4. Mini Magnetic Cassette Unit for Multi Program Storage.
5. M.D.I. Single Step and Auto Selector for programs.
6. RS.232C Interface with 7 Din Pin connection to computers and paper tape punch units.
7. Parallel Printer Interface for obtaining hard copy of programs.
8. I.S.O. Format - allowing 'G' and 'M' Code Programming from DIN 66025 extract.
9. Full 'G' and 'M' Code Listings on V.D.U. when required to assist programming.
10. Single Mode Selection Keys.
11. Axis Jog on All Axes with variable feedrate and 0.01 mm step.
12. Feedrate over-ride from 1 mm/min. to 750 mm/min.
13. Programmable Spindle Speed (optional extra). Programmable Feedrate 0-1500 mm/min.
14. Linear Interpolation on 3 axes with vectorially correcting feedrates.
15. Circular Interpolation on X-Y Plane.
16. Absolute/Incremental, Inch/mm programming throughout program build-up.
17. Manual and Programmable Program Stops.
18. Repeat facility allowing build-up of canned cycles-subroutines, Do-Loops for drilling and pocket milling cycles. (Repeats available - 10^7).
19. Floating Datum Facility.
20. 500 Block Memory (1000 blocks available).
21. Tool length Offsets for up to 16 tools.
22. Tool diameter compensation.
23. Programmable Coolant.
24. Programmable Dwell from 0.1 to 9999.9 seconds.
25. 4 Auxiliary Outputs.
26. 6 Programmable Inputs.
27. Mirror Imaging on XY planes simultaneously.
28. Program Scaling and Component Scaling from 0.01%-650%.
29. Program Offset allowing dry run facility.
30. Optional 4th axis control.
31. System resolution 0.01 mm (0.0004″).

MECHANICAL

Working Table Surface	180 x 705 mm (7″ x 28″)
Longitudinal Travel	375 mm (14¾″)
Cross Travel	175 mm (7″)
Quill Travel	70 mm (2¾″)
Spindle to Table	280 mm (11¼″)
Spindle to Column	230 mm (9″)
Spindle Taper	R8
Z Axis Ballscrew	16 mm dia. 5 mm Pitch
X Axis Ballscrew	25 mm dia. 5 mm Pitch
Y Axis Ballscrew	25 mm dia. 5 mm Pitch
Max. Machine Length	1000 mm (39″)
Max. Machine Width	1320 mm (52″)
Height	1910 mm (75″)
Weight	550 Kilos (1210 lbs)
Mechanical Resolution	0.01 mm (0.0004″)

ELECTRICAL

Standard 10 Speed Machine
50 Hz - 3 phase 380/440 V
60 Hz - 3 phase 220 V

Vari Speed Machine
50 Hz/60 Hz - 1 phase 220 V

Spindle Motor
Standard 10 Speed Machine .....4 pole 1.2 kw 1½ H.P.
Vari Speed .....A.C. 1.5 kw 1420 rpm 2 H.P. 6.7 amps incorporating AC Frequency Changer

Axes Motors
Stepper Motors .....200 Steps/Rev, 3.5 Amps, 1.1 Ohms.

STANDARD EQUIPMENT

Flood Coolant System, Splash Guard, Table Guards and Swarf Tray, Tool Kit, Halogen Lo Vo Light, Operation and Instruction Manual, One Shot Lubrication System. 2 Days' Operator Training.

EXTRA EQUIPMENT

Spray Mist Coolant, Automatic Lubrication System, Quick Change Tooling, Printer, CAD/CAM and Off Line Computer Programming, Desk Top Programmer, Robot with F.M.S. Programmable Vari Speed (0-3000 rpm), Easidraw Table Plotter.

DENFORD MACHINE TOOLS

DENFORD MACHINE TOOLS LIMITED, BIRDS ROYD, BRIGHOUSE, WEST YORKSHIRE Phone: 0484 712264 Telex: 517478