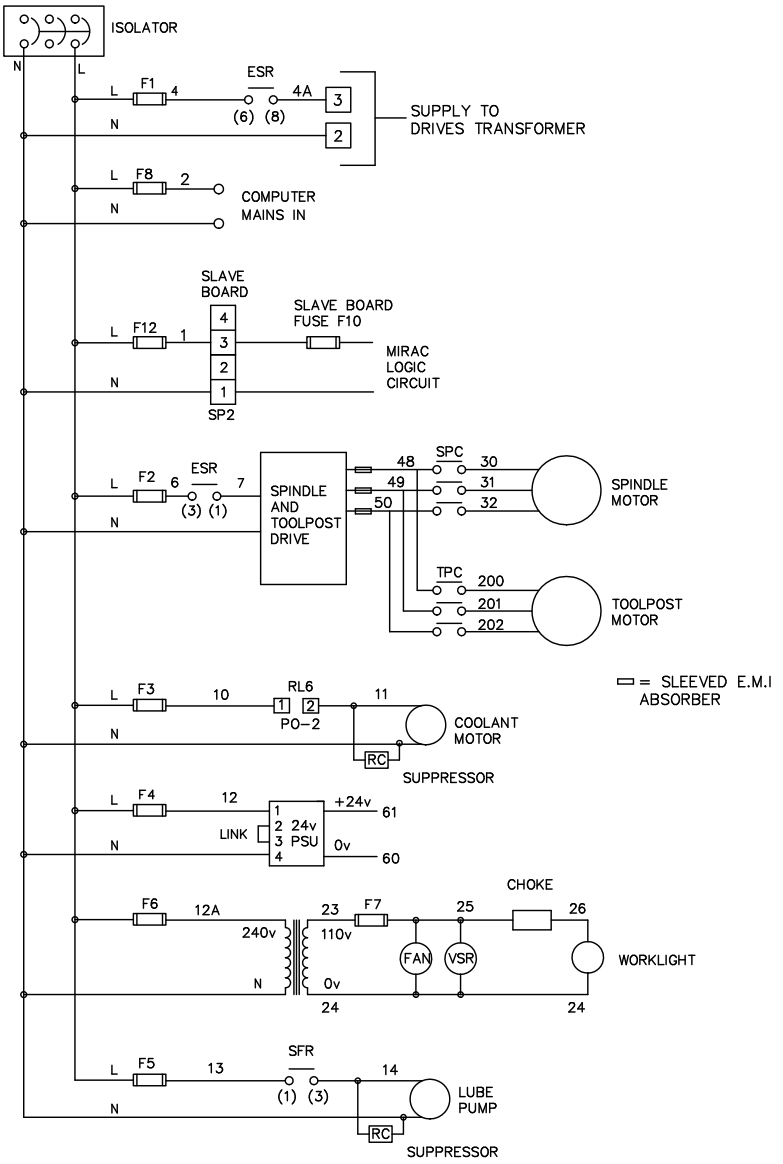

SPC SPINDLE POWER CONTACTOR
TPC TOOLPOST POWER CONTACTOR
SFR SPINDLE FORWARD RELAY
ESR EMERGENCY STOP RELAY
PO-2 10 WAY OUTPUT CONNECTOR ON SLAVEBOARD
R6 RELAY ON SLAVEBOARD

NUMBERS IN BRACKETS REFER TO RELAY TERMINAL NUMBERS

DENFORD MACHINE TOOLS LTD BRIGHOUSE WEST YORKSHIRE

DRN BY A McHENRY

DATE 6-1-92

A3- 100133 C

MIRAC POWER SCHEMATIC (SINGLE DRIVE)

SHEET 1 OF